## 2.15.33.1 Balancing course «Coulored pencil 1»

CLIMBING BALANCING TRAINING MEETING

*Description:*

1 Platform triangular; 1.5/1.5/1.5 m; Ph = 0.7 m
1 Balancing beam; l = 2.0 m
1 Balancing rope (thick) with support rope; l = 2.0 m
1 Hovering Woods; l = 2.0 m
1 Tree stick jetty; l ~ 3.5 m; w ~ 1.3 m; h ~ 0.5 - 0.7 m
with integrated platform; 1.3 x 0.7/1.0 m
1 Post as coloured pencil
1 Hovering balancing beam; l = 2.0 m
1 Balancing jetty; l = 2.0 m; 1 Post as coloured pencil
1 Balancing beam; l = 3.0 m; 1 Post as coloured pencil
1 Rope-traverse; l = 2.0 m
1 Climbing net wall; w ~ 2.25 m; h = 2.0 m
1 Rope-net-ascent; l = 2.5 m
1 Monkey rope; l = 2.4 m
1 Look-out as a brush; h ~ 3.5 m
1 Balancing beam; l ~ 3.1 m
1 Post as coloured pencil
3 Stilts; h = 2.45 m
1 Balancing rope with support rope; l = 2.5 m
1 Post as colour pencil
1 Balancing rope; l = 3.0 m
1 Bouncing plank; l = 3.0 m; w = 0.8 m
coloured design
Ropes and nets: blue

Last update: 01/2021

**Notice:**

The standard colour of the ropes and nets is blue! The photo shows a customized product.

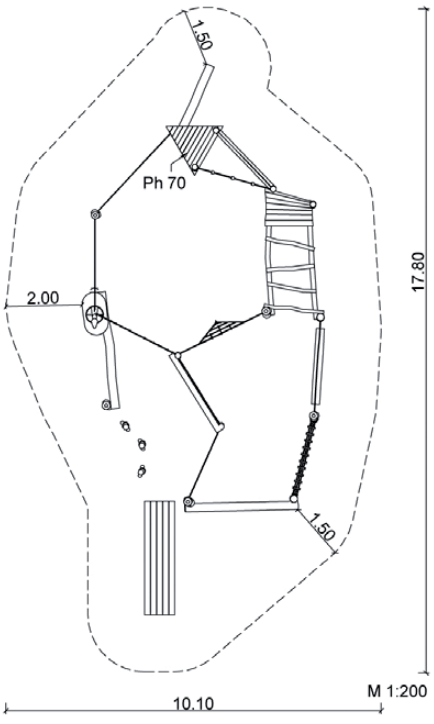


| | |
|---|---|
| | 2 – Agility equipment |
| | 6 – 12 years |
| | ~ 24 children |
| | 2.0 m |
| | from 5 |
| | 124.0 m² |
| | ~ 1900 kg; biggest ~ 250 kg |
| | 2 installers at 28 h; + equipment |
| | 20 |
| | ~ 3.0 m³; 2 GA |

SIK-Holz quality inspection according to DIN EN 1176 at the factory by a qualified playground inspector.

SIK-Holz® Spielen – Individuell – Kreativ

master enterprise for wood sculpture

© SIK-Holzgestaltungs GmbH

## 2.15.33.1 Balancing course «Coulored pencil 1»